LIGO

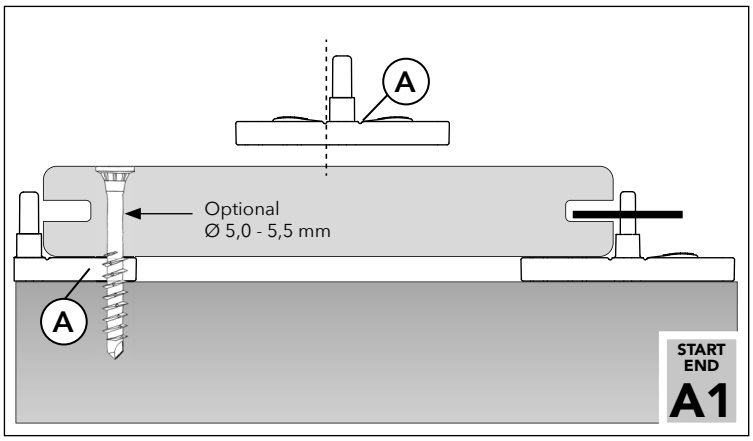
A
Optional
Ø 5,0 - 5,5 mm
A
START
END
A1

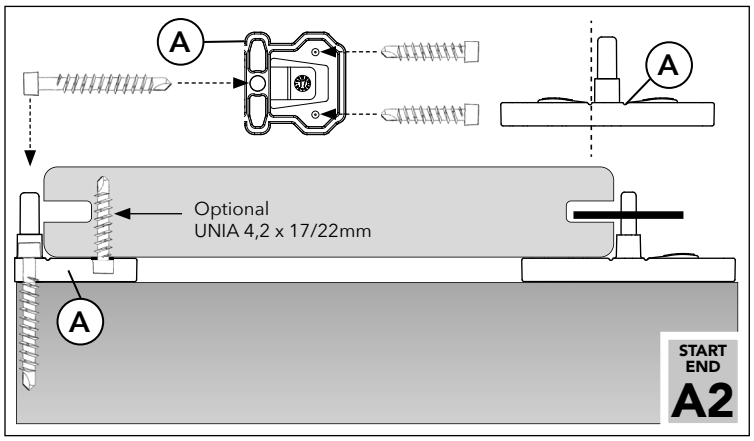
A
A
Optional
UNIA 4,2 x 17/22mm
A
START
END
A2

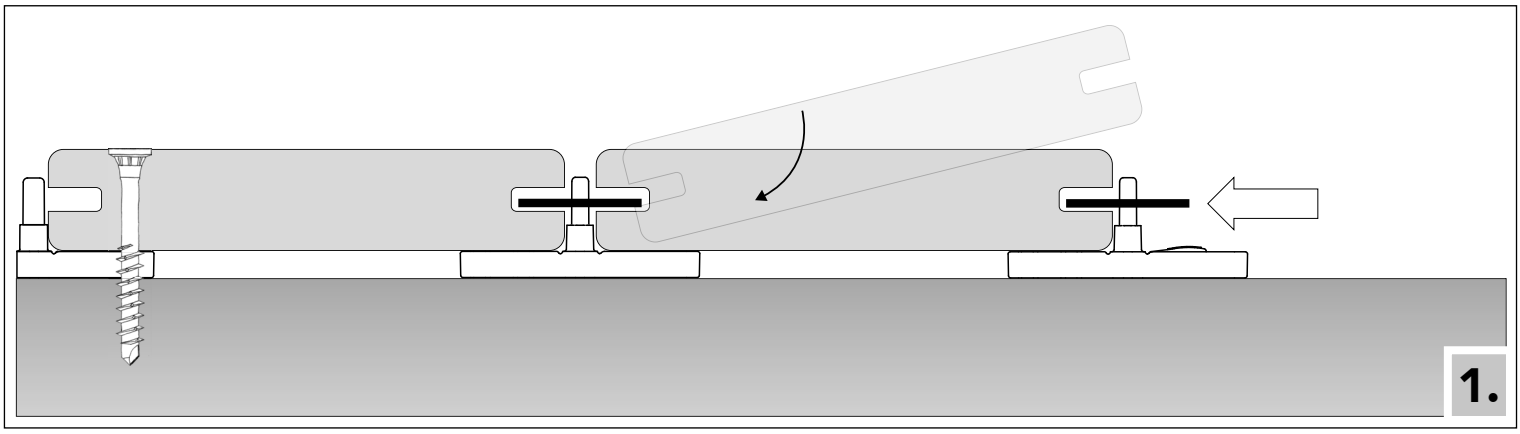
1.

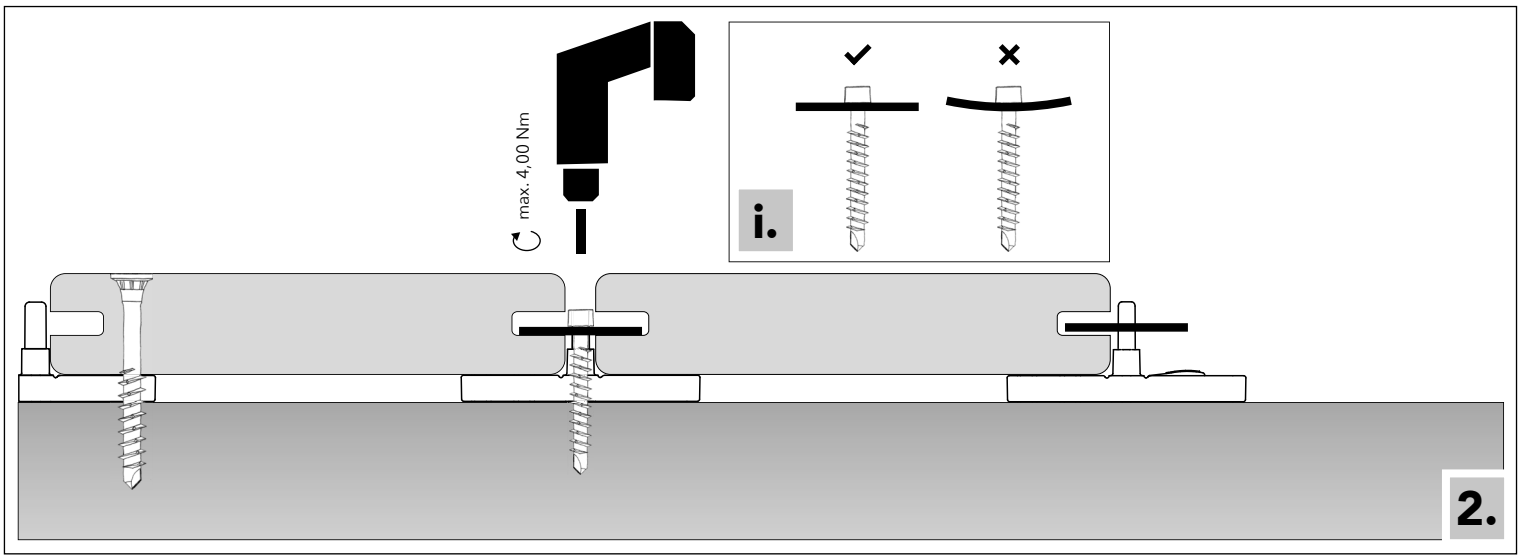
max. 4,00 Nm
i.
2.

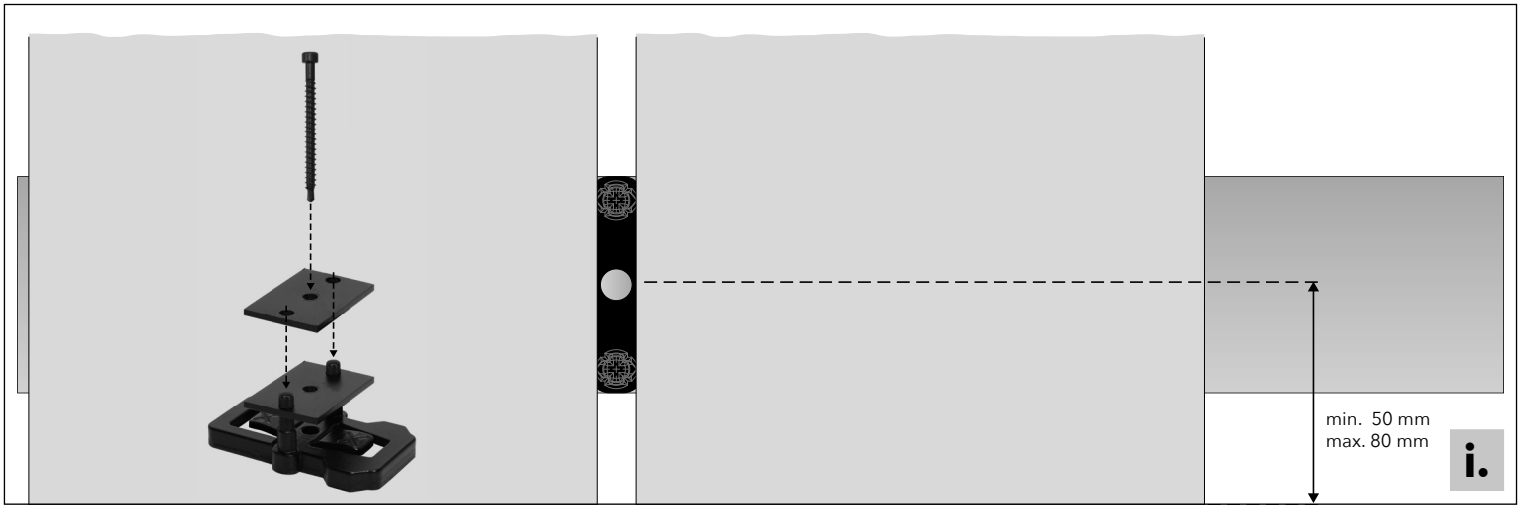
min. 50 mm
max. 80 mm
i.

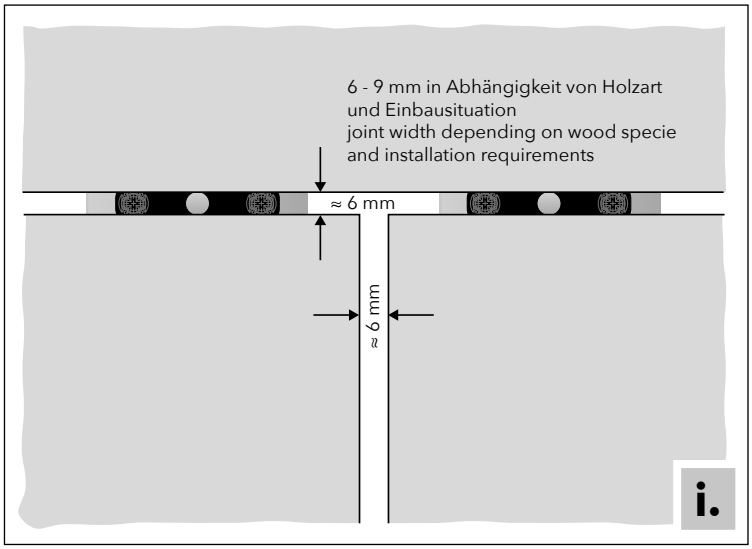
6 - 9 mm in Abhängigkeit von Holzart
und Einbausituation
joint width depending on wood specie
and installation requirements
≈ 6 mm
≈ 6 mm
i.

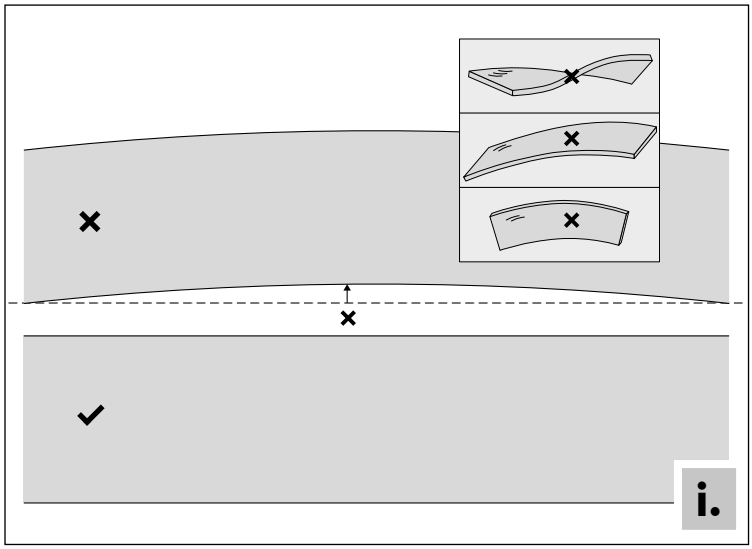
i.

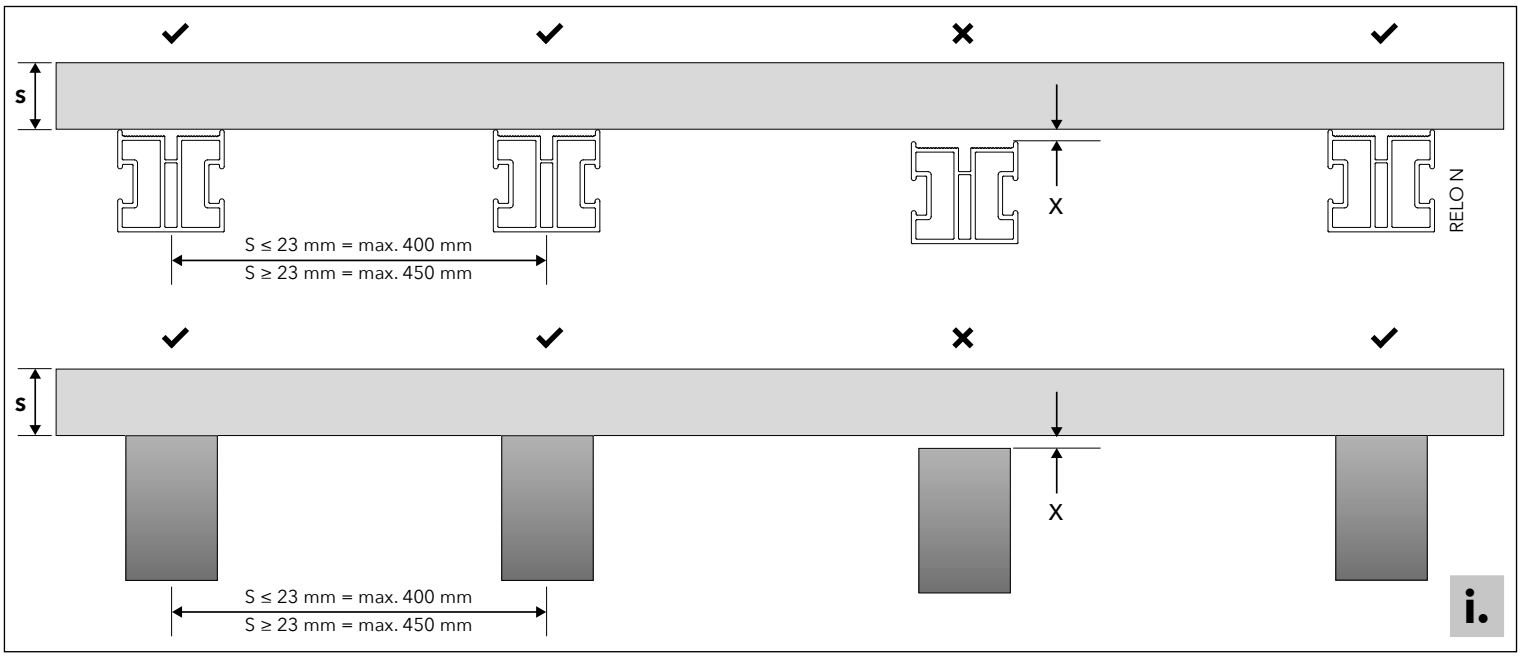
s
X
RELO N
S ≤ 23 mm = max. 400 mm
S ≥ 23 mm = max. 450 mm
s
X
S ≤ 23 mm = max. 400 mm
S ≥ 23 mm = max. 450 mm
i.

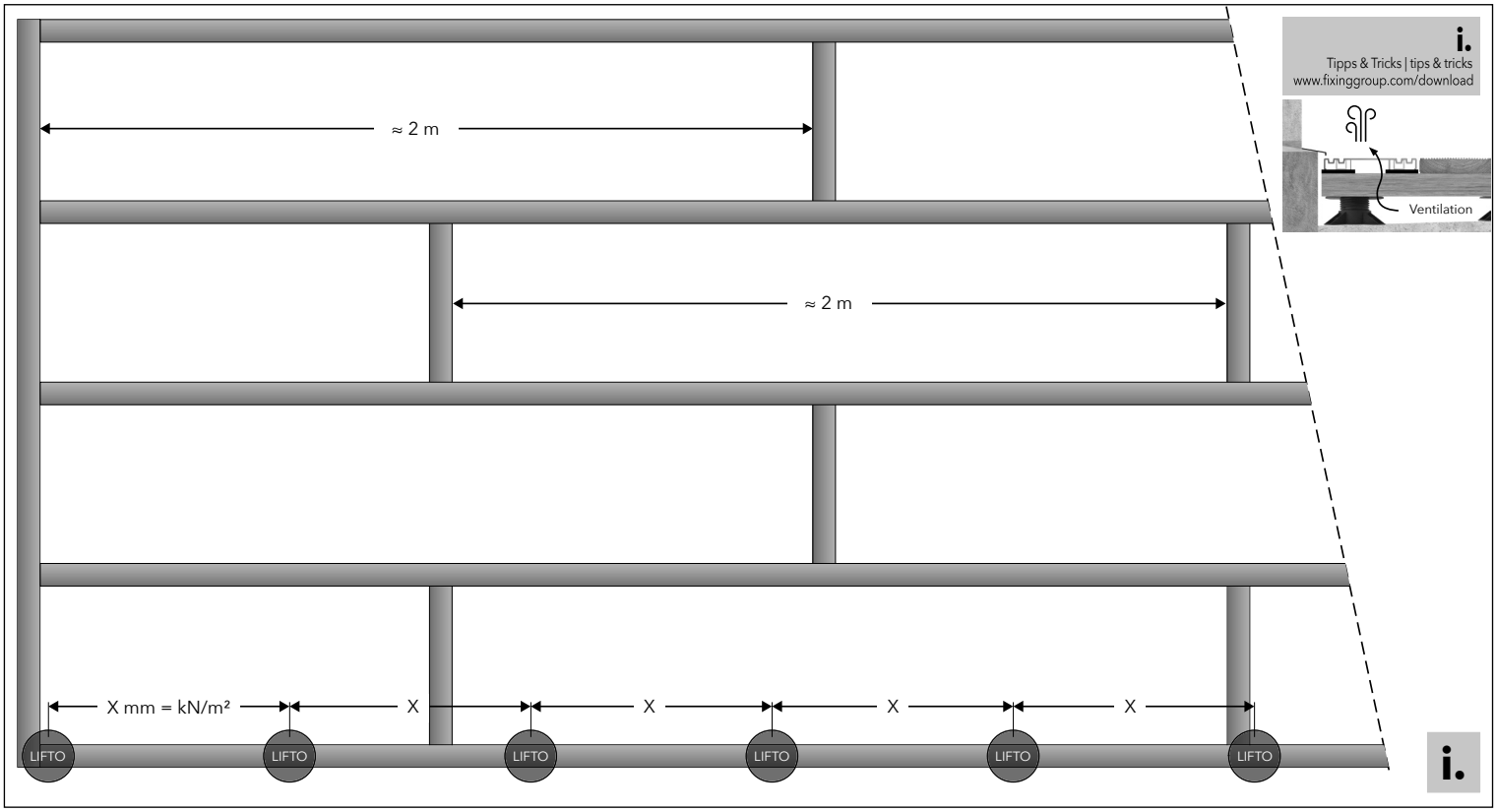
≈ 2 m
≈ 2 m
X mm = kN/m²
X
X
X
X
LIFTO
LIFTO
LIFTO
LIFTO
LIFTO
LIFTO
i.
Tipps & Tricks | tips & tricks
www.fixinggroup.com/download
Ventilation
i.